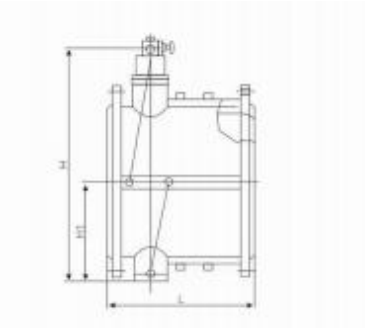HH(46/48/49)X/H micro-resistance slow-closing butterfly check valve